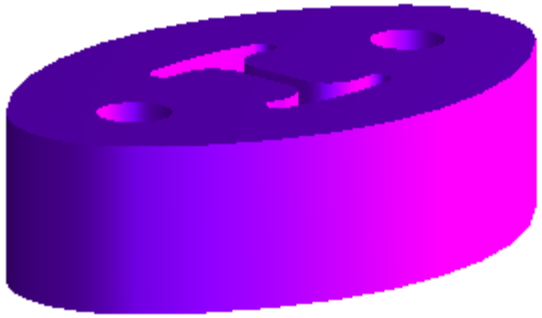

AUXILIARY VIEW (1 : 1)

TOP VIEW (1 : 1)

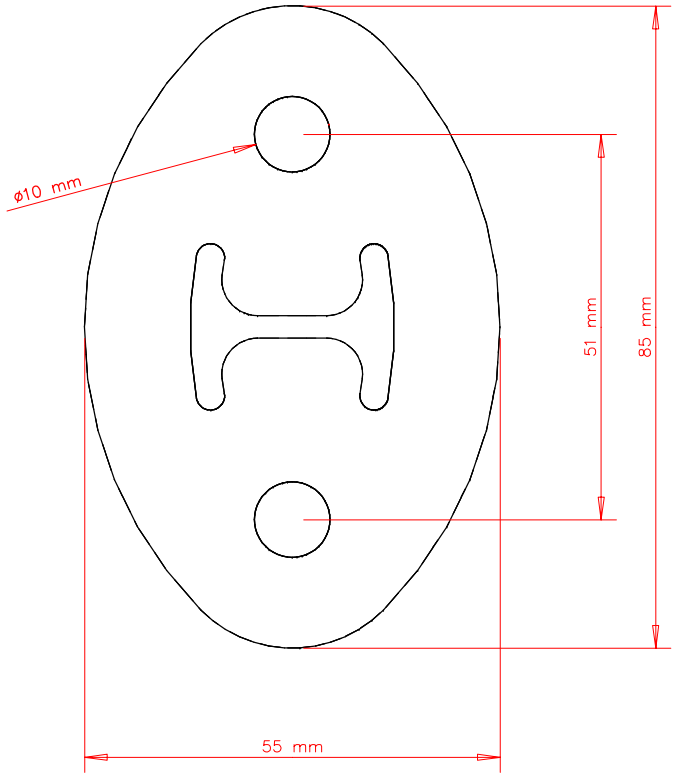

NOTES:

1. MATERIAL: POLYURETHANE
2. FINISH: COLOUR = PURPLE
3. ALL DIMENSIONS AS PER FINISHED PART

SIDE VIEW (1 : 1)

No.	REVISION	BY	CHKD	DATE
0	ORIGINAL ISSUE	P.S.		20/4/10

DESCRIPTION
EXHAUST MOUNT
EXH012

© COPYRIGHT. ALL RIGHTS RESERVED
THIS DRAWING IS STRICTLY CONFIDENTIAL AND MUST NOT BE COPIED, REPRODUCED OR ADAPTED, NOR MAY ARTICLES BE MANUFACTURED IN ACCORDANCE WITH THE DRAWING WITHOUT PRIOR WRITTEN PERMISSION OF POWERFLEX.

POWERFLEX
EPTG LTD

MATERIAL: POLYURETHANE

DRAWING No.: EXH012

REV: 0