AUXILIARY VIEW (1 : 1)

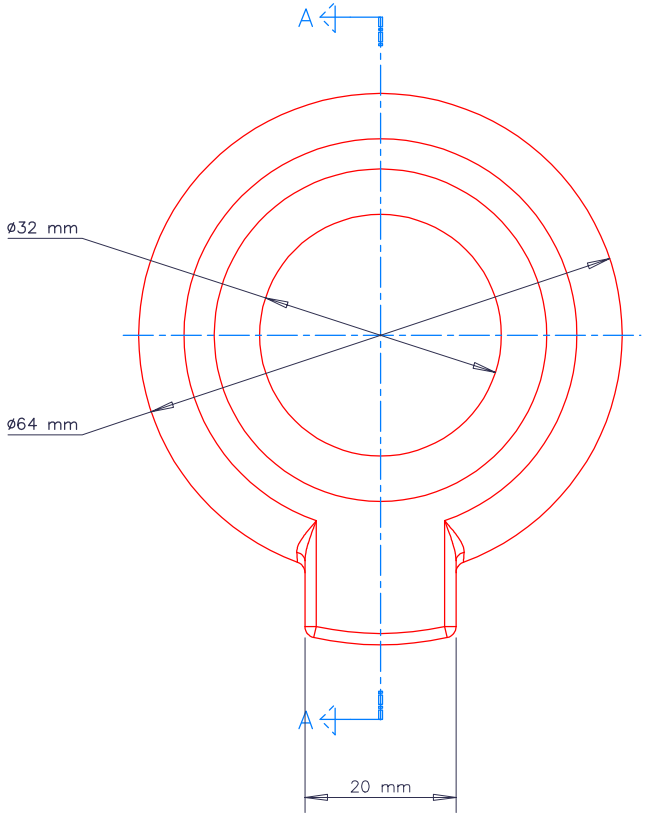

TOP VIEW (1 : 1)

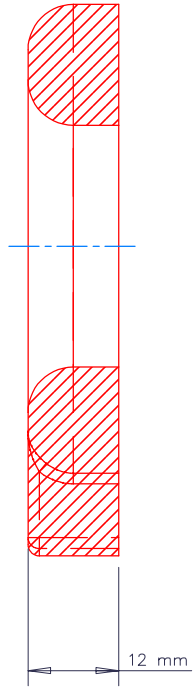

SECTION A–A (1 : 1)

NOTES:

1. MATERIAL: POLYURETHANE
   HIGH TEMERATURE SPEC
2. FINISH: COLOUR = RED
3. ALL DIMENSIONS AS PER FINISHED PART.

No.	REVISION	BY	CHKD	DATE
O	ORIGINAL ISSUE	PS		08/12/09

DESCRIPTION
EXHAUST MOUNT
EXH007

© COPYRIGHT. ALL RIGHTS RESERVED
THIS DRAWING IS STRICTLY CONFIDENTIAL AND MUST NOT BE COPIED, REPRODUCED OR ADAPTED, NOR MAY ARTICLES BE MANUFACTURED IN ACCORDANCE WITH THE DRAWING WITHOUT PRIOR WRITTEN PERMISSION OF POWERFLEX.

POWERFLEX
EPTG LTD

MATERIAL: POLYURETHANE

DRAWING No.: EXH007

REV: 0